THE INFORMATION CONTAINED IN THIS DRAWING IS THE SOLE PROPERTY OF STELLAR INDUSTRIES INC. ANY REPRODUCTION IN PART OR WHOLE WITHOUT THE WRITTEN PERMISSION OF STELLAR INDUSTRIES INC. IS PROHIBITED.

ITEM	PART	DESCRIPTION		QTY.
1	26492PC	FRNT MNT 03 CHEVY 26492 POWDERCOAT	2	
2	30988	FLAT REAR XTRA LIFT MID MOUNT	1	
4	30994	BRKT WLDMT REAR MNT X-LIFT C-2500	2	
5	0501	CAP SCR 0.50-13X2.00 HHGR5		4
6	0352	WASHER 0.50 USS FLAT ZINC		35
7	C6106	NUT 0.50-13 HHGR5 NYLOC		13
8	C1002	CAP SCR 0.50-13X6.00 HHGR5		2
10	0505	CAP SCR 0.50-13X3.50 HHGR5		1
11	0502	CAP SCR 0.50-13X2.50 HHGR5		2
12	0500	CAP SCR 0.50-13X1.75 HHGR5		2
14	0506	CAP SCR 0.50-13X4.00 HHGR5		2
15	31641	PLATE FORMED MID 04DODGE2500 MM	2	

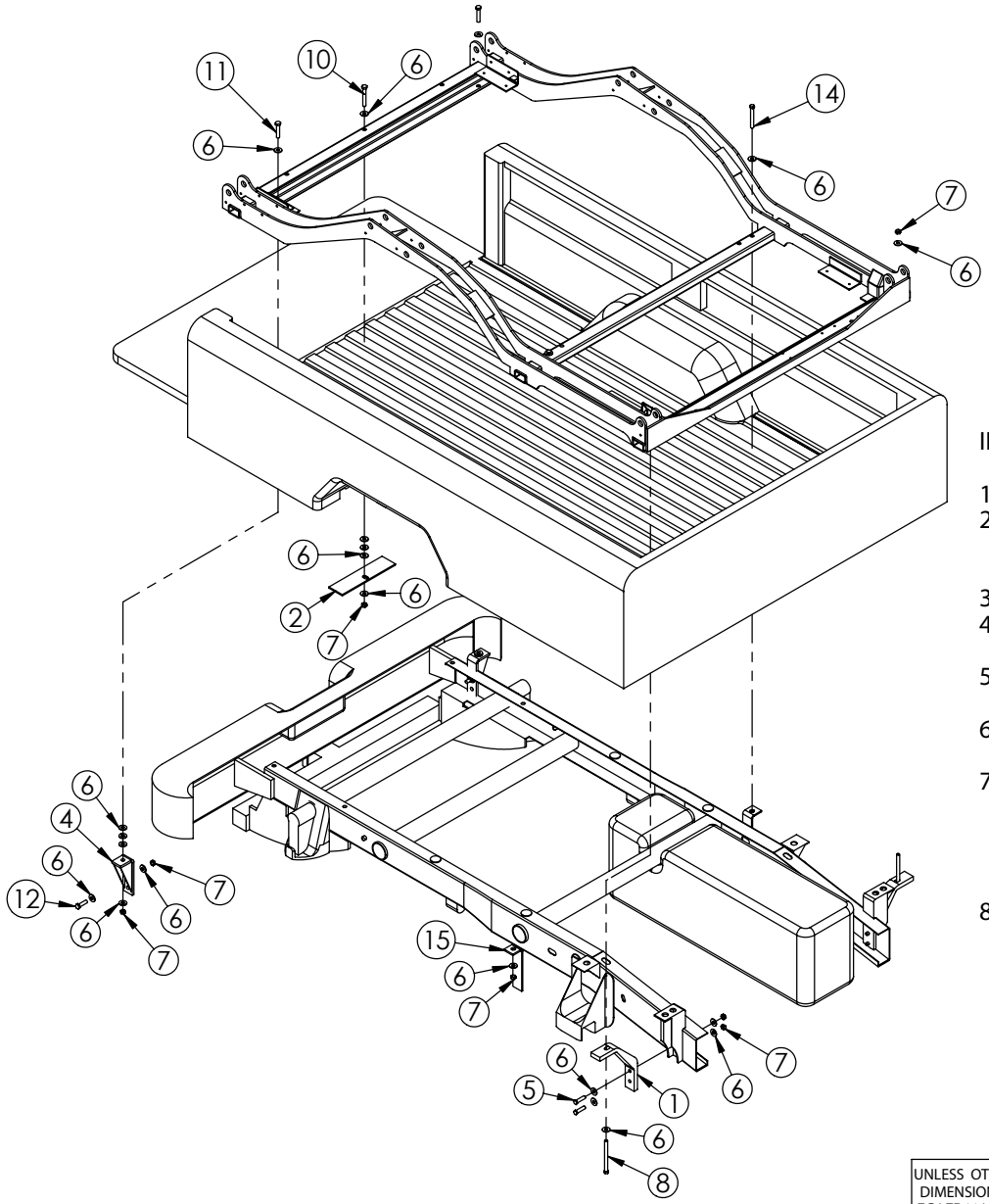

INSTALLATION INSTRUCTIONS

1) PLACE XTRA LIFT INTO TRUCK BOX.
2) LOCATE & FASTEN REAR BRKT AS SHOWN. BOTTOM HOLE WILL ALIGN WITH HITCH BOLT ALREADY ATTACHED. DRILL UPPER HOLE THRU FRAME.
3) DRILL UP FROM BOTTOM THRU REAR MNT HOLE.
4) MAKE SURE XTRA LIFT IS SQUARE IN TRUCK BOX AND TIGHTEN REAR BOLTS.
5) DRILL THRU REAR MIDDLE HO LE FROM TOP OF BOX. ATTACH BRACKET WITH HARDWARE SHOWN.
6) DRILL THRU MIDDLE MOUNT HOLES FROM TOP OF BOX. ATTACH BRACKET WITH HARDWARE SHOWN AND WELD TO FRAME.
7) LOCATE FRONT MOUNTING BRACKETS AS SHOWN IN DRAWING. MARK TWO HOLES IN FRAME WERE THE BRACKET IS FLUSH WITH BOTH SIDE OF FRAME AND TOP OF BOX CROSSMEMBER. USE CAUTION WHEN DRILLING THRU FRAME. PROTECT GAS TANK BEFORE DRILLING.
8) DRILL FRONT HOLES FROM UNDER TRUCK BOX WITH BRKT ATTACHED TO THE FRAME. HOLES WILL BE LOCATED 6 1/16" AWAY FROM TRUCK FRAME, HOLES WILL BE CENTERED ON TRUCK BOX CROSS MEMB ER TIGHTEN DOWN ALL BOLTS AND MAKE SURE HARDWARE IS NOT LOOSE.

UNLESS OTHERWISE SPECIFIED
DIMENSIONS ARE IN INCHES
TOLERANCES ARE:
TWO DECIMAL PLACES: + OR - .03
THREE DECIMAL PLACES: + OR - .005

DO NOT SCALE DRAWING

CAD GENERATED DRAWING, DO NOT MANUALLY UPDATE

MATERIAL

WEIGHT | MAT'L #

DRAWN SAB | DATE 05/04/04

CHECKED -- | --

MFG ENG -- | --

Starship Custom Vehicles
office (574) 293-1775
cell (574) 596-5331
sales@startracks.org
4315 Wyland Drive
Elkhart, IN 46516-9501

MTG KIT XTRA LIFT 8FT CHEVY 2500 MM

SIZE A | DWG. NO. 30985 | REV.

SCALE 1:30 | CAD FILE: 30985 | SHEET 1 OF 1

REV	DESCRIPTION	DATE	BY	REV	DESCRIPTION	DATE	BY